FINSTA D.96A

Financial statement of an account message

Recommendation of D6 EWG sub-working group Finance

for the use of the UN/EDIFACT-Message

Version 1.2 from November 21, 2000

Table of contents

Table of contents 1

1. Introduction 2

1.1. Scope 2
1.1.1. Functional Definition 2
1.1.2. Field of Application 2
1.1.3. Principles 2

1.2. References 2

1.3. Data Segment Clarification 3

1.4. Codes to be used in DE 1131 and DE 3055 (associated with DE 3434 – Institution Branch Number) 4

2. Message Layout 7

2.1. Branching Diagram 7

2.2. Message Structure 9

3. Segment Layout 11

3.1. Introduction 11
3.1.1. UN/EDIFACT Directory 96.A Block 11
3.1.2. D6 Description Block 11
3.1.3. CRG Description Block 12

3.2. Segment Description 12

4. History of changes 42

1. Introduction

This specification provides the definition of the Financial statement of an account message (FINSTA) to be used in Electronic Data Interchange (EDI) between trading partners involved in administration, commerce and transport.

1.1. Scope

1.1.1. Functional Definition

This message can be used to cater for various communication functions between financial institutions and their customers. The most frequent function is to provide a statement of booked items confirming entries on a customer's account. The message type may contain several accounts (quoted in the B-level).

1.1.2. Field of Application

The Financial statement of an account message may be used for both national and international trade. It is based on universal commercial practice and is not dependent on the type of business or industry.

1.1.3. Principles

Several accounts, value dates, entry dates and currencies may be specified.

1.2. References

This document is based on:

Title	Version	Remarks	Source
ISO 9735 Electronic data interchange for administration, commerce and transport (EDIFACT) – Application level syntax rules	Syntax version number: 3		http://www.iso.ch/cate/cat.html
ISO 646 Information processing – ISO 7-bit coded character set for information interchange			http://www.iso.ch/cate/cat.html

UNITED NATIONS TRADE DATA INTERCHANGE DIRECTORY (UNTDID)	D.96A	Definition FINSTA	http://www.unece.org/trade/untdid
UNITED NATIONS TRADE DATA INTERCHANGE DIRECTORY (UNTDID)	D.00B	UNCL (codelist) only	http://www.unece.org/trade/untdid
Recommended Practice For Message Flow And Security For EDIFACT Payments (D6)	Version 2.03	D6_RecPract_2v03.pdf	http://www.edifact-wg.org
FINSTA D.96A Financial statement of an account message, Recommendation of D6 Sub Working Group Finance for the use of the UN/EDIFACT Message	Version 1.0	Finsta.rtf (created on 3/3/98)	
D6 Referencing Rules and Recommendations	Version 1.1	D6_RefRules_1v01.pdf	http://www.edifact-wg.org

1.3. Data Segment Clarification

This section should be read in conjunction with the Branching Diagram and the Segment Table which indicate mandatory, conditional and repeating requirements.

The following semantic principles apply to the message and are intended to facilitate the understanding and implementation of the message: The Financial Statement of an Account message is structured in three levels: A,B and C. Level A starts with the UNH segment, level B starts with the LIN segment in Segment Group 4 and level C starts with the SEQ segment in Segment Group 6.

- Level A contains general data related to the whole message and is contained in Segment Groups 1, 2, 3 and 7.
- Level B contains the account related details such as balances, account number. Furthermore, this level describes the kind of statement.
- Level C contains the single item as it was advised to the customer by a debit/credit advice. Furthermore, this level contains any level B of a multiple message such as PAYMUL, DEBMUL or CREMUL. In some special cases it is possible, that several B levels are contained in a message without any dependent C levels (balance confirmation for auditing purposes).

Where a choice of code or text is given only the code element should be used wherever possible.

1.4. Codes to be used in DE 1131 and DE 3055 (associated with DE 3434 – Institution Branch Number)

DE3434 – DE1131	25 = Bank identification
(Code List Qualifier)	43 = CHIPS Participant ID
	44 = CHIPS Universal ID
	154 = Bank branch sorting identification
	155 = Automated clearing house
	157 = Clearing code
DE3434 – DE3055	5 = ISO (International Organization for Standardization)
(Code List Responsible Agency, coded)	19 = FRRC (Federal Reserve Routing Code)
	108 = FR, Banque de France
	114 = US, ABA (American Bankers Association)
	118 = SE, Svenska Bankfoereningen
	119 = IT, Associazione Bancaria Italiana
	121 = CH, Telekurs AG
	122 = CH, Swiss Securities Clearing Corporation
	124 = NO, Norwegian Bankers Ass.
	125 = FI, The Finnish Bankers' Association
	128 = BE, Belgian Bankers' Association
	130 = DK, PBS (Pengainstitutternes Betalings Service)
	131 = DE, German Bankers Association

© Copyright D6 2000

	133 = GB, Association for Payment Clearing Services
	137 = AT, Verband oesterreichischer Banken und Bankiers
	171 = NL, Interpay Girale Services
	202 = PT, Banco de Portugal
	275 = ES, Banco de España
	ZA7 = TW, Taiwanese Bankers' Association (D6 code)
	Zxx = If no code exists, then "Z" + "ISO 3166 two alpha country code"

These codes should be combined as indicated in the following table:

To identify a financial institution by the following code	**1131 Code**	**3055 Code**
ISO Bank Identifier Code	25	5
Fedwire Id	25	19
French Bank Code	25	108
Swedish Bank Clearing Number	157	118
Italian Bank Code	25	119
Swiss Bank Clearing Number	157	121
Norwegian Bank Code	25	124
Finnish Bank Code	25	125
Belgian Bank Code	25	128
Danish Bank Code	25	130

© Copyright D6 2000

German Bankleitzahl	25	131
GB Bank Sort Code	154	133
Austrian Bankleitzahl	25	137
Dutch Bank Code	25	171
Portuguese Bank Code	25	202
Portuguese Clearing House Code	155	202
Spanish Bank code	25	275
Chinese Taipei Bank Code	154	ZA7 (D6 code)
CHIPS Participant ID	43	114
CHIPS Universal ID	44	114

2. Message Layout

2.1. Branching Diagram

The use of the shadowed segments is either not recommended or depends upon national requirements. These segments are marked with **N** in the chapter "Segment Layout" without further description.

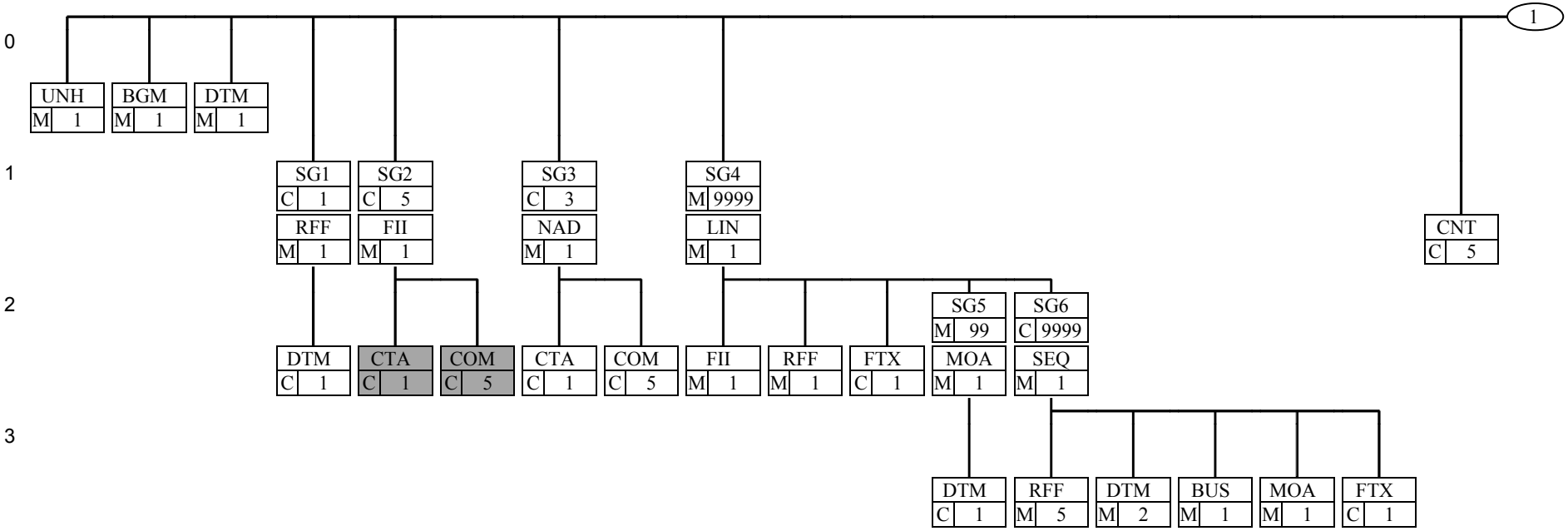

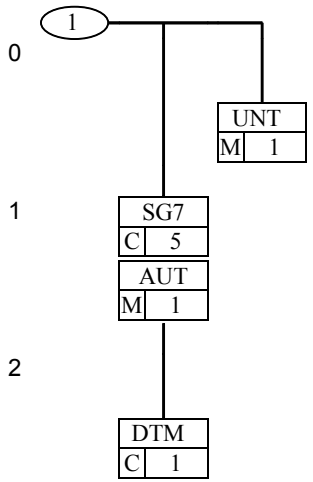
1
0
UNT
M 1
1
SG7
C 5
AUT
M 1
2
DTM
C 1

2.2. Message Structure

```
Pos    Tag Name                                  S   R

0010   UNH Message header                        M   1
0020   BGM Beginning of message                  M   1
0030   DTM Date/time/period                      M   1

0040       ────── Segment group 1 ──────────────── C   1──────────┐
0050   RFF Reference                              M   1           │
0060   DTM Date/time/period                       C   1──────────┘

0070       ────── Segment group 2 ──────────────── C   5──────────┐
0080   FII Financial institution information      M   1           │
0090   CTA Contact information                    C   1           │
0100   COM Communication contact                  C   5──────────┘

0110       ────── Segment group 3 ──────────────── C   3──────────┐
0120   NAD Name and address                       M   1           │
0130   CTA Contact information                    C   1           │
0140   COM Communication contact                  C   5──────────┘

0150       ────── Segment group 4 ──────────────── M   9999───────┐
0160   LIN Line item                              M   1           │
0170   FII Financial institution information      M   1           │
0180   RFF Reference                              M   1           │
0190   FTX Free text                              C   1           │
                                                                  │
0200       ────── Segment group 5 ──────────────── M   99─────────┐│
0210   MOA Monetary amount                        M   1           │
0220   DTM Date/time/period                       C   1──────────┘│
                                                                  │
0230       ────── Segment group 6 ──────────────── C   9999───────┐│
0240   SEQ Sequence details                       M   1           │
0250   RFF Reference                              M   5           │
0260   DTM Date/time/period                       M   2           │
0270   BUS Business function                      M   1           │
```

```
0280   MOA Monetary amount                          M   1
0290   FTX Free text                                C   1
0300   CNT Control total                            C   5

0310       ------ Segment group 7 ------------------ C   5
0320   AUT Authentication result                    M   1
0330   DTM Date/time/period                         C   1
0340   UNT Message trailer                          M   1
```

3. Segment Layout

3.1. Introduction

This section describes each segment of the UN/EDIFACT message FINSTA.

Each segment is presented in a separate table and in the sequence in which they appear in the message.

The upper half of each table provides information about the segment or segment group concerned, the lower part of the table describes the data elements (composite and simple).

Each table is structured in three vertical blocks: UN/EDIFACT Directory 96.A, D6 and CRG:

3.1.1. UN/EDIFACT Directory 96.A Block

The left third of the table provides information extracted from the original UN/EDIFACT Directory 96.A.

In the first line of this block, the segment or segment group tag is followed by the maximum number of occurrences.

The second line contains the (M)andatory / (C)onditional indicator at segment level, according to the UN/EDIFACT Directory 96.A

In the lower half of the table, the data element tag (composite or simple) and full name are followed by the corresponding (M)andatory / (C)onditional indicators and the format.

3.1.2. D6 Description Block

This block presents the recommendations of D6 (EWG sub-working group Finance).

Both for segment level and for date element level (simple and composite), the following status/sub-status are defined:

M	MANDATORY	The entity is mandatory and must be sent (according to directory, unchanged)
R	REQUIRED	The entity is required and must be sent
D	DEPENDENT	The entity must be sent in certain conditions, as defined by the relevant explanatory note

O	OPTIONAL	The entity is optional and may be sent at the discretion of the user
N	NOT USED	The entity is not used and should be omitted. Any data placed in an element marked with N will be ignored.

At data element level:

- The first column indicates the status as defined above (with the options M, R, D, O, N);
- The second column includes information affecting the code values as follows:

*	Restricted codelist	Code values preceded by an asterisk (*) are the only codes available for use in the given context
<blank>	Open codelist	Code values not preceded by an asterisk (*) are not restricted (they are open). The available codes are listed in the codelist of the corresponding UN/EDIFACT directory.
* R	Required code in a restricted list	Codes preceded by an “R” are required and must occur in one repetition of the corresponding segment if used.
R	Required code in an open list	Codes preceded by an “R” are required and must occur in one repetition of the corresponding segment if used.

- The third column provides additional comments and descriptions.

Note that if a segment group/segment/composite data element is flagged as “N”, all data elements within that segment group/segment/composite data element will have blank status indicators.

3.1.3. CRG Description Block

The last block of the table describes the preferred use of the message for a group of multinational companies constituting the "Corporate Reference Group" (CRG). The CRG is established as a forum for discussions of standardisation issues. The members of the group are predominantly companies with activities in several countries and a large resource base.

3.2. Segment Description

See next page

UNH - 1 MESSAGE HEADER						
UN/EDIFACT Directory 96.A M			D6 M		CRG M	
A service segment starting and uniquely identifying a message. The message type code for the Financial statement of an account message is FINSTA. Note: Financial statement of an account messages conforming to this document must contain the following data in segment UNH, composite S009: Data element 0065 FINSTA 0052 D 0054 96A 0051 UN						
Segment number : 1						
UN/EDIFACT Directory 96.A			D6 Description			CRG Description
0062 Message reference number	M	an..14	M		This sender-generated sequence number must be unique within an interchange. DE 0062 in the UNT segment must have the same value.	
S009 MESSAGE IDENTIFIER	M		M		Incorrect data in this composite DE will cause message rejection.	
0065 Message type identifier	M	an..6	M	*R	FINSTA = Financial statement of an account message	
0052 Message type version number	M	an..3	M	*R	D = Directory	
0054 Message type release number	M	an..3	M	*R	96A = Release 96A	
0051 Controlling agency	M	an..2	M	*R	UN = UN/ECE/TRADE/WP.4, United Nations Standard Messages (UNSM)	
0057 Association assigned code	C	an..6	O	*R	FUN01G = Industry/ Country Code/ Version number/ Function, , i.e., Finance/ United Nations/ Version 1/ General	
0068 Common access reference	C	an..35	N			
S010 STATUS OF THE TRANSFER	C		N			
0070 Sequence message transfer number	M	n..2				
0073 First/last sequence message transfer indication	C	a1				
Example: UNH+19970630MJRF+FINSTA:D:96A:UN:FUN01G'						

BGM - 1 Beginning of message						
UN/EDIFACT Directory 96.A M		D6 M			CRG M	
A segment by means of which the sender must uniquely identify the FINSTA message using its type and number and its function.						
Segment number : 2						
UN/EDIFACT Directory 96.A		D6 Description			CRG Description	
C002 Document/message name	C	R				
1001 Document/message name, coded	C an..3	R	*	54 = Legal statement of an account – booked items		
			*	55 = Listing statement of an account – items pending to be booked		
			*	56 = Closing statement of an account – includes interest calculation		
			*	182 = Balance confirmation – confirmation of a balance at a specified date (without transaction details)		
			*	306 = Cash pool statement		
1131 Code list qualifier	C an..3	N				
3055 Code list responsible agency, coded	C an..3	N				
1000 Document/message name	C an..35	N				
1004 Document/message number	C an..35	R		Must be unique within the legally binding time of archiving EDI documents. A second FINSTA message with the same document number but without the code 7 in DE 1225 will be rejected.		
1225 Message function, coded	C an..3	R	*	9 = Original	*	Use only 9 = Original
			*	7 = Duplicate If code 7 is used, then segment group 1 is required.		
			*	31 = Copy		
4343 Response type, coded	C an..3	N				
Example: BGM+54+3739824950+9'						

DTM - 1 Date/time/period						
UN/EDIFACT Directory 96.A M		D6 M			CRG M	
A segment specifying the date and, if required, the time the message is created.						
Segment number : 3						
UN/EDIFACT Directory 96.A		D6 Description			CRG Description	
C507 Date/time/period	M	M				
2005 Date/time/period qualifier	M an..3	M	*R	137 = Document/message date/time		
2380 Date/time/period	C an..35	R		A date in the future can be accepted given the creation of messages across different time zones.		
2379 Date/time/period format qualifier	C an..3	R	*	102 = CCYYMMDD	*	Use only 102 = CCYYMMDD
			*	203 = CCYYMMDDHHMM		
Example: DTM+137:19970630:102'						

SG1 - 1 RFF-DTM		
UN/EDIFACT Directory 96.A C	D6 D	CRG N
A group of segments identifying a previously-sent message.	This segment group is used only when DE1225 in BGM contains the code 7 (duplicate).	Not used.
RFF - 1 Reference		
UN/EDIFACT Directory 96.A M	D6 M	CRG
A segment identifying the reference of the previously-sent message.	This segment contains the original BGM number of the previously sent message regardless of whether the two BGM numbers are the same.	

Segment number : 4

UN/EDIFACT Directory 96.A			D6 Description			CRG Description	
C506	**Reference**	M	M				
1153	Reference qualifier	M an..3	M	*R	ACW = Reference number to previous message		
1154	Reference number	C an..35	R		BGM 1004 from the original message		
1156	Line number	C an..6	N				
4000	Reference version number	C an..35	N				

Example:
RFF+ACW:3452422040'

SG1 - 1 RFF-DTM						
DTM - 1 Date/time/period						
UN/EDIFACT Directory 96.A C		D6 O			CRG	
A segment identifying the creation date/time of the referenced message.						
Segment number : 5						
UN/EDIFACT Directory 96.A		D6 Description			CRG Description	
C507 Date/time/period	M	M				
2005 Date/time/period qualifier	M an..3	M	*R	171 = Reference date/time		
2380 Date/time/period	C an..35	R		Creation date of the original message.		
2379 Date/time/period format qualifier	C an..3	R	*	102 = CCYYMMDD		
			*	203 = CCYYMMDDHHMM		
Example: DTM+171:19970530:102'						

SG2 - 5 FII-CTA-COM		
UN/EDIFACT Directory 96.A C	D6 O	CRG N
A group of segments identifying the financial institutions involved in the financial statement of an account message, their functions and and their contacts.	This segment group is used for routing purposes only.	Not used.
FII - 1 Financial institution information		
UN/EDIFACT Directory 96.A M	D6 M	CRG
A segment identifying the financial institution(s) associated with the transaction, in coded or uncoded form and their function.		
Segment number : 6		

UN/EDIFACT Directory 96.A			D6 Description			CRG Description	
3035	**Party qualifier**	M an..3	M	*	MS = Document/message issuer/sender		
				*	MR = Message recipient		
				*	AS= Account servicing financial institution. The usage of this code is subject to national agreement.		
C078	**Account identification**	C	N				
3194	Account holder number	C an..35					
3192	Account holder name	C an..35					
3192	Account holder name	C an..35					
6345	Currency, coded	C an..3					
C088	**Institution identification**	C	R		The Bank Identifier Code may only be placed in DE 3433. The national bank/branch sorting code may only be placed in DE 3434. DEs 3433 and 3434 are mutually exclusive.		
3433	Institution name identification	C an..11	D				
1131	Code list qualifier	C an..3	D	*R	25 = Bank identification		
3055	Code list responsible agency, coded	C an..3	D	*R	5 = ISO (International Organization for Standardization)		
3434	Institution branch number	C an..17	D				
1131	Code list qualifier	C an..3	D	*	The allowed combinations of the codes of DE1131 and 3055 are stated in Section 1.4. of this MIG.		
3055	Code list responsible agency, coded	C an..3	D	*	The allowed combinations of the codes of DE1131 and 3055 are stated in Section 1.4. of this MIG.		
3432	Institution name	C an..70	N				
3436	Institution branch place	C an..70	N				
3207	**Country, coded**	C an..3	D		This data element is used when DE 3434 is used and no country is mentioned in its associated DE 3055. ISO 3166 two alpha country code.		

Example:
FII+MS++DEUTDEFF:25:5'

SG2 - 5 FII-CTA-COM							
CTA - 1 Contact information							
UN/EDIFACT Directory 96.A C			D6 N			CRG	
A segment identifying a person or a department for the party specified in the leading FII segment to whom communication should be directed.			Not used.				
Segment number : 7							
UN/EDIFACT Directory 96.A			D6 Description			CRG Description	
3139	**Contact function, coded**	C an..3					
C056	**Department or employee details**	C					
3413	Department or employee identification	C an..17					
3412	Department or employee	C an..35					

SG2 - 5 FII-CTA-COM						
COM - 5 Communication contact						
UN/EDIFACT Directory 96.A C			D6 N		CRG	
A segment identifying communication type(s) and number(s) of person(s) or department(s) specified in the associated CTA segment.			Not used.			
Segment number : 8						
UN/EDIFACT Directory 96.A			D6 Description		CRG Description	
C076 Communication contact	M					
3148 Communication number	M an..512					
3155 Communication channel qualifier	M an..3					

SG3 - 3 NAD-CTA-COM		
UN/EDIFACT Directory 96.A C	D6 O	CRG N
A group of segments identifying the name(s) and address(es) of non- financial parties involved in the transaction, their function and their contacts.	This segment group is used for routing purposes only.	Not used.
NAD - 1 Name and address		
UN/EDIFACT Directory 96.A M	D6 M	CRG
A segment identifying the names and addresses of the parties associated with the FINSTA, in coded or uncoded form, and their function.		
Segment number : 9		

UN/EDIFACT Directory 96.A			D6 Description			CRG Description	
3035	**Party qualifier**	M an..3	M	*	MR = Message recipient		
				*	HQ = Account owner. The usage of this code is subject to national agreement.		
C082	**Party identification details**	C	D		Either C082 or DE's C080, C059, 3164, 3229, 3251 and 3207 are used. In this composite only bilaterally agreed codes are allowed.		
3039	Party id. identification	M an..35	M				
1131	Code list qualifier	C an..3	D				
3055	Code list responsible agency, coded	C an..3	D				
C058	**Name and address**	C	N				
3124	Name and address line	M an..35					
3124	Name and address line	C an..35					
3124	Name and address line	C an..35					
3124	Name and address line	C an..35					
3124	Name and address line	C an..35					
C080	**Party name**	C	D		Either C082 or DE's C080, C059, 3164, 3229, 3251 and 3207 are used. Use of structured name and address has to be allowed by bilateral agreement.		
3036	Party name	M an..35	M				
3036	Party name	C an..35	O				
3036	Party name	C an..35	O				
3036	Party name	C an..35	N				
3036	Party name	C an..35	N				
3045	Party name format, coded	C an..3	N				
C059	**Street**	C	D				
3042	Street and number/p.o. box	M an..35	M				
3042	Street and number/p.o. box	C an..35	O				
3042	Street and number/p.o. box	C an..35	O				

3042	Street and number/p.o. box	C an..35	N				
3164	**City name**	C an..35	D				
3229	**Country sub-entity identification**	C an..9	D				
3251	**Postcode identification**	C an..9	D				
3207	**Country, coded**	C an..3	D		ISO 3166 two alpha country code.		

Example:

NAD+MR+2729712345832::9'

SG3 - 3 NAD-CTA-COM							
CTA - 1 Contact information							
UN/EDIFACT Directory 96.A C			D6 O			CRG	
A segment identifying a person or a department for the party specified in the leading NAD segment to whom communication should be directed.							
Segment number : 10							
UN/EDIFACT Directory 96.A			D6 Description			CRG Description	
3139	**Contact function, coded**	C an..3	R	*R	IC = Information contact		
C056	**Department or employee details**	C	R				
3413	Department or employee identification	C an..17	N				
3412	Department or employee	C an..35	R		The name of the department or employee in free text form.		
Example: CTA+IC+:JIM JOHNSON'							

SG3 - 3 NAD-CTA-COM						
COM - 5 Communication contact						
UN/EDIFACT Directory 96.A C		D6 O			CRG	
A segment identifying communication type(s) and number(s) of person(s) or department(s) specified in the associated CTA segment.						
Segment number : 11						
UN/EDIFACT Directory 96.A		D6 Description			CRG Description	
C076 Communication contact	M	M				
3148 Communication number	M an..512	M		When character sets UNOA or UNOB are used, the @ in e-mail addresses must be shown with (at) (parenthesis, at, parenthesis), e.g. <john.smith(at)abc.com>.		
3155 Communication channel qualifier	M an..3	M		FX = Telefax TE = Telephone EM = Electronic mail TL = Telex The use of other codes must be bilaterally agreed.		
Example: COM+496926050:TE'						

SG4 - 9999 LIN-FII-RFF-FTX-SG5-SG6		
UN/EDIFACT Directory 96.A M	D6 M	CRG M
A group of segments specifying details related to the account and type of account, such as statement number, balance, relevant amounts and dates.		
LIN - 1 Line item		
UN/EDIFACT Directory 96.A M	D6 M	CRG M
A segment identifying the beginning of the specification of information related to the account by a sequential line number.		
Segment number : 12		

UN/EDIFACT Directory 96.A			D6 Description			CRG Description	
1082	**Line item number**	C n..6	R		Application generated number of the count of the lines in a financial statement of account. This number starts with 1 in ascending order without gaps. This should not be confused with lines in a statement.		
1229	**Action request/notification, coded**	C an..3	N				
C212	**Item number identification**	C	O				
7140	Item number	C an..35	N				
7143	Item number type, coded	C an..3	R	*	BV = Daily statement		
				*	BW = Periodical statement within a bilaterally agreed period of time		
				*	BX = Weekly statement within a calendar week		
				*	BY = Monthly statement within a calendar month		
1131	Code list qualifier	C an..3	N				
3055	Code list responsible agency, coded	C an..3	N				
C829	**Sub-line information**	C	N				
5495	Sub-line indicator, coded	C an..3					
1082	Line item number	C n..6					
1222	**Configuration level**	C n..2	N				
7083	**Configuration, coded**	C an..3	N				

Example:

LIN+1'

SG4 - 9999 LIN-FII-RFF-FTX-SG5-SG6						
FII - 1 Financial institution information						
UN/EDIFACT Directory 96.A M		D6 M			CRG M	
A segment specifying the account and type of account.						
Segment number : 13						
UN/EDIFACT Directory 96.A		D6 Description			CRG Description	
3035 Party qualifier	M an..3	M		AS = Account servicing financial institution		
C078 Account identification	C	R				
3194 Account holder number	C an..35	R		The account number should be entered according to the national account number scheme. If an IBAN is used it should be present in this DE.		
3192 Account holder name	C an..35	O				
3192 Account holder name	C an..35	O				
6345 Currency, coded	C an..3	O		ISO 4217 currency code.		
C088 Institution identification	C	D		This composite DE is not needed in some countries. The Bank Identifier Code may only be placed in DE 3433. The national bank/branch sorting code may only be placed in DE 3434.		
3433 Institution name identification	C an..11	D		International identification of the financial institution in coded form.		
1131 Code list qualifier	C an..3	D	*R	25 = Bank identification		
3055 Code list responsible agency, coded	C an..3	D	*R	5 = ISO (International Organization for Standardization)		
3434 Institution branch number	C an..17	D		National identification of the financial institution in coded form.		
1131 Code list qualifier	C an..3	D	*	The allowed combinations of the codes of DE1131 and 3055 are stated in Section 1.4. of this MIG.		
3055 Code list responsible agency, coded	C an..3	D	*	The allowed combinations of the codes of DE1131 and 3055 are stated in Section 1.4. of this MIG.		
3432 Institution name	C an..70	N				
3436 Institution branch place	C an..70	N				
3207 Country, coded	C an..3	D		ISO 3166 two alpha country code. This DE should be used unless an IBAN is included in DE 3194.		
Example: FII+AS+78520739:J SMITH::USD+DRESDEFF:25:5+DE'						

SG4 - 9999 LIN-FII-RFF-FTX-SG5-SG6						
RFF - 1 Reference						
UN/EDIFACT Directory 96.A M		D6 M			CRG M	
A segment specifying, if necessary, the statement number and paging details.						
Segment number : 14						
UN/EDIFACT Directory 96.A		D6 Description			CRG Description	
C506 Reference	M	M				
1153 Reference qualifier	M an..3	M	*R	ADP = statement number This number is allocated by the sender in sequence for each statement type (at BGM segment, DE1001) and is reset, if necessary, according to the bank-customer agreement.		
1154 Reference number	C an..35	R				
1156 Line number	C an..6	D		This data element specifies the statement page number, starting with 1, when there is more than one page per statement (used when more than 9999 C levels entries).		
4000 Reference version number	C an..35	N				
Example: RFF+ADP:T16:1'						

SG4 - 9999 LIN-FII-RFF-FTX-SG5-SG6						
FTX - 1 Free text						
UN/EDIFACT Directory 96.A C		D6 O			CRG N	
A segment in free form to provide additional information which cannot be accommodated within other segments.					Not used.	
Segment number : 15						
UN/EDIFACT Directory 96.A		D6 Description			CRG Description	
4451 Text subject qualifier	M an..3	M	*	AAI = general information		
			*	AIS = advertisement information		
			*	AIF = details of domestically agreed information		
4453 Text function, coded	C an..3	N				
C107 Text reference	C	N				
4441 Free text, coded	M an..3					
1131 Code list qualifier	C an..3					
3055 Code list responsible agency, coded	C an..3					
C108 Text literal	C	R		Free text or structured text, depending on the previous code in the message or bilaterally agreed.		
4440 Free text	M an..70	M				
4440 Free text	C an..70	O				
4440 Free text	C an..70	O				
4440 Free text	C an..70	O				
4440 Free text	C an..70	O				
3453 Language, coded	C an..3	O		ISO 639 two alpha code.		
Example: FTX+AAI+++IMPORTANT STATEMENTS+EN'						

SG4 - 9999 LIN-FII-RFF-FTX-SG5-SG6						
SG5 - 99 MOA-DTM						
UN/EDIFACT Directory 96.A M		D6 M			CRG M	
A group of segments indicating the balance of the account, its type and the respective dates (e.g. opening balance, final closing balance, etc.).						
MOA - 1 Monetary amount						
UN/EDIFACT Directory 96.A M		D6 M			CRG M	
A segment indicating the balance of the account and its type.		Within each B level all DE6345 must contain the same currency code.				
Segment number : 16						
UN/EDIFACT Directory 96.A		D6 Description			CRG Description	
C516 Monetary amount	M	M				
5025 Monetary amount type qualifier	M an..3	M		**The following codes should be used only when code 54 is used in DE 1001 in BGM:** 315 =Opening balance 343 = Closing balance 344 = Value date balance - or available balance 345 = Cost information for providing the statement 346 = Total credits 347 = Total debits 357 = Interim opening balance (used only in multi-page statements, dependent on DE1156 in SG4 - RFF) 358 = Interim closing balance (used only in multi-page statements, dependent on DE1156 in SG4 - RFF) 360 = Accrued debit interest 361 = Accrued credit interest **The following codes should be used only when code 55 is used in DE 1001 in BGM:** 344 = Value date balance - or available balance 345 = Cost information for providing the statement 346 = Total credits 347 = Total debits 453 = Limit of the agreed monetary amount debit line (Floor limit indicator for debit values) ZA6 = Limit of the agreed monetary amount credit line (Floor limit indicator for credit values [D6 code]) These last 2 codes specify the minimum debit/credit value [transaction amount] reported in the message. Amounts lower than these limits will not be reported.		

					The following codes should be used only when code 56 is used in DE 1001 in BGM: 315 = Opening balance 343 = Closing balance 344 = Value date balance - or available balance 345 = Cost information for providing the statement 346 = Total credits 347 = Total debits 357 = Interim opening balance (used only in multi-page statements, dependent on DE1156 in SG4 - RFF) 358 = Interim closing balance (used only in multi-page statements, dependent on DE1156 in SG4 - RFF) 359 = Balance to be confirmed for audit reasons 360 = Accrued debit interest 361 = Accrued credit interest		
					The following codes should be used only when code 182 is used in DE 1001 in BGM: 315 = Opening balance 343 = Closing balance 344 = Value date balance - or available balance 345 = Cost information for providing the statement 346 = Total credits 347 = Total debits 359 = Balance to be confirmed for audit reasons		
5004	Monetary amount	C n..18	R		A debit amount is shown by a (-) in front of the amount.		
6345	Currency, coded	C an..3	R				DE not used.
6343	Currency qualifier	C an..3	N				
4405	Status, coded	C an..3	N				

Example:
MOA+315:55000:EUR'

SG4 - 9999 LIN-FII-RFF-FTX-SG5-SG6						
SG5 - 99 MOA-DTM						
DTM - 1 Date/time/period						
UN/EDIFACT Directory 96.A C		D6 D			CRG D	
A segment specifying the date associated with the amount specified in the leading MOA segment.		This segment is always required except for SG5-MOA-DE5025 with qualifiers 345, 453 and ZA6.				
Segment number : 17						
UN/EDIFACT Directory 96.A		D6 Description			CRG Description	
C507 Date/time/period	M	M				
2005 Date/time/period qualifier	M an..3	M	*R	171 = Reference date/time		
2380 Date/time/period	C an..35	R				
2379 Date/time/period format qualifier	C an..3	R	*	102 = CCYYMMDD	*	Use only 102 = CCYYMMDD
			*	203 = CCYYMMDDHHMM		and/or
			*	711 = CCYYMMDD-CCYYMMDD - period for accrued interests and/or totals (used only with qualifiers 346, 347, 360 and 361 in DE5025).	*	711 = CCYYMMDD-CCYYMMDD - period for accrued interests and/or totals.
Example: DTM+171:19970630:102'						

SG4 - 9999 LIN-FII-RFF-FTX-SG5-SG6						
SG6 - 9999 SEQ-RFF-DTM-BUS-MOA-FTX						
UN/EDIFACT Directory 96.A C			D6 D		CRG D	
A group of segments providing references, value and entry dates, the business function of the booked items, amounts, type and status.			This segment group is not used when BGM DE1001 contains qualifier 182 – balance confirmation, or when there have been no transactions during the reporting period.			
SEQ - 1 Sequence details						
UN/EDIFACT Directory 96.A M			D6 M		CRG M	
A segment identifying the beginning of the specification of the individual entries booked.						
Segment number : 18						
UN/EDIFACT Directory 96.A			D6 Description		CRG Description	
1245 Status indicator, coded	C	an..3	O			
C286 Sequence information	C		R			
1050 Sequence number	M	an..6	M	Application generated number of the count of the sequence in a financial statement. The sequence number must be reset to one for each occurence of a new line number (in LIN segment).		
1159 Sequence number source, coded	C	an..3	N			
1131 Code list qualifier	C	an..3	N			
3055 Code list responsible agency, coded	C	an..3	N			
Example: SEQ++1'						

SG4 - 9999 LIN-FII-RFF-FTX-SG5-SG6						
SG6 - 9999 SEQ-RFF-DTM-BUS-MOA-FTX						
RFF - 5 Reference						
UN/EDIFACT Directory 96.A M		D6 M			CRG M	
A segment identifying references of parties involved in the transaction.						
Segment number : 19						
UN/EDIFACT Directory 96.A		D6 Description			CRG Description	
C506 Reference	M	M				
1153 Reference qualifier	M an..3	M	*	AIK = Bank's individual transaction reference number		
			*	ACK = Bank Reference		
			*	AEK = Payment Order Number		
			*	CR = Customer reference number		
			*	AKJ = Direct debit reference		
				For more information see D6 Referencing Rules and Recommendations.		
				The following codes can also be used:		
			*	CK = Cheque Number		
			*	PQ = Payment reference		
			*	RA = Remittance information		
			*	ACD = Additional Reference Number		
			*	AGB = Contract party reference number (direct debit mandate number). The usage of this code is subject to national agreement.		
1154 Reference number	C an..35	R				
1156 Line number	C an..6	N				
4000 Reference version number	C an..35	N				
Example: RFF+CR:3232548456'						

SG4 - 9999 LIN-FII-RFF-FTX-SG5-SG6						
SG6 - 9999 SEQ-RFF-DTM-BUS-MOA-FTX						
DTM - 2 Date/time/period						
UN/EDIFACT Directory 96.A M		D6 M			CRG M	
A segment specifying the value and or entry date and/or time.						
Segment number : 20						
UN/EDIFACT Directory 96.A		D6 Description			CRG Description	
C507 Date/time/period	M	M				
2005 Date/time/period qualifier	M an..3	M	*	202 = Posting Date		
			*	209 = Value date		
			*	455 = Expected value date – used for preadvice only when code 55 (listing statement of an account) is present in BGM – DE1001.		
2380 Date/time/period	C an..35	R				
2379 Date/time/period format qualifier	C an..3	R	*R	102 = CCYYMMDD		
Example: DTM+209:19970530:102'						

SG4 - 9999 LIN-FII-RFF-FTX-SG5-SG6						
SG6 - 9999 SEQ-RFF-DTM-BUS-MOA-FTX						
BUS - 1 Business function						
UN/EDIFACT Directory 96.A M		D6 M			CRG M	
A segment identifying certain characteristics of the items stored in level C, such as business function.						
Segment number : 21						
UN/EDIFACT Directory 96.A		D6 Description			CRG Description	
C521 Business function	C	O		The contents of this composite are forwarded unchanged if it has been taken from a customer order.		
4027 Business function qualifier	M an..3	M	*R	1 = Underlying business function		
4025 Business function, coded	M an..3	M				
1131 Code list qualifier	C an..3	O				
3055 Code list responsible agency, coded	C an..3	O				
4022 Business description	C an..70	O				
3279 Geographic environment, coded	C an..3	O	*	DO = Domestic		
			*	DR = Domestic with regulatory information required		
			*	IR = International with regulatory information required		
			*	IN = International		
			*	IS = European Union - ECBS payments/direct debits compliant with EBS-200 (ECBS).		
4487 Type of financial transaction, coded	C an..3	O		1 = Clean payment		
C551 Bank operation	C	O				
4383 Bank operation, coded	M an..3	M		For instance, SWIFT transaction type codes could be used, in which case DE1131 would be 133 and DE3055 would be 17.		
1131 Code list qualifier	C an..3	O				
3055 Code list responsible agency, coded	C an..3	O				
4463 Intra-company payment, coded	C an..3	O	*R	1 = Intra-company payment		
Example: BUS+1:GDS+IN'						

SG4 - 9999 LIN-FII-RFF-FTX-SG5-SG6						
SG6 - 9999 SEQ-RFF-DTM-BUS-MOA-FTX						
MOA - 1 Monetary amount						
UN/EDIFACT Directory 96.A M		D6 M			CRG M	
A segment specifying the amount,its type and status of the booked item.		Within each B level all DE6345 must contain the same currency code.				
Segment number : 22						
UN/EDIFACT Directory 96.A		D6 Description			CRG Description	
C516 Monetary amount	M	M				
5025 Monetary amount type qualifier	M an..3	M		**The following code should be used only when code 54 or 56 is used in DE 1001 in BGM:** 348 = Booked amount on the account **The following code should be used only when code 55 is used in DE 1001 in BGM:** 349 = Pending amount to be booked on the account		
5004 Monetary amount	C n..18	R		A debit amount is shown by a (-) in front of the amount.		
6345 Currency, coded	C an..3	R		ISO 4217 currency code		
6343 Currency qualifier	C an..3	N				
4405 Status, coded	C an..3	O	* *	4 = Final 5 = Subject to final payment		
Example: MOA+348:31560:EUR'						

SG4 - 9999 LIN-FII-RFF-FTX-SG5-SG6							
SG6 - 9999 SEQ-RFF-DTM-BUS-MOA-FTX							
FTX - 1 Free text							
UN/EDIFACT Directory 96.A C			D6 O			CRG O	
A segment in free form to provide additional information which cannot be accommodated within other segments.							
Segment number : 23							
UN/EDIFACT Directory 96.A			D6 Description			CRG Description	
4451	**Text subject qualifier**	M an..3	M	*R	ADS = Booked item information		
4453	**Text function, coded**	C an..3	N				
C107	**Text reference**	C	N				
4441	Free text, coded	M an..3					
1131	Code list qualifier	C an..3					
3055	Code list responsible agency, coded	C an..3					
C108	**Text literal**	C	R				
4440	Free text	M an..70	M				
4440	Free text	C an..70	O				
4440	Free text	C an..70	O				
4440	Free text	C an..70	O				
4440	Free text	C an..70	O				
3453	**Language, coded**	C an..3	O		ISO 639 two alpha code.		DE not used.
Example: FTX+ADS+++FINAL BOOKED AMOUNT+EN''							

CNT - 5 Control total						
UN/EDIFACT Directory 96.A C		D6 O			CRG O	
A segment identifying the kind of control checks and the totals according to the coded form.						
Segment number : 24						
UN/EDIFACT Directory 96.A		D6 Description			CRG Description	
C270 Control	M	M				
6069 Control qualifier	M an..3	M	*	2 = Number of line items in message (LIN segments)	*	Use only 2 = Number of line items in message (LIN segments)
			*	39 = Total number of individual transactions (= total number of occurrences of SEQ segments)		
6066 Control value	M n..18	M				
6411 Measure unit qualifier	C an..3	N				
Example: CNT+2:1'						

SG7 - 5 AUT-DTM						
UN/EDIFACT Directory 96.A C		D6 O			CRG O	
A group of segments specifying details of any authentication (validation) procedures applied to the FINSTA message.		The use of this segment group, including algorithms and calculation procedures, is dependent on bilaterally agreed conditions between the sender and the receiver.				
AUT - 1 Authentication result						
UN/EDIFACT Directory 96.A M		D6 M			CRG N	
A segment specifying details of any authentication (validation) procedures applied to the FINSTA message.					Not used.	
Segment number : 25						
UN/EDIFACT Directory 96.A		D6 Description			CRG Description	
9280 Validation result **9282 Validation key identification**	M an..35 C an..35	M O				
Example: AUT+283926'						

SG7 - 5 AUT-DTM						
DTM - 1 Date/time/period						
UN/EDIFACT Directory 96.A C		D6 R			CRG R	
A segment identifying the validation date/time.						
Segment number : 26						
UN/EDIFACT Directory 96.A		D6 Description			CRG Description	
C507 Date/time/period	M	M				
2005 Date/time/period qualifier	M an..3	M		218 = Authentication/validation date/time		
2380 Date/time/period	C an..35	R				
2379 Date/time/period format qualifier	C an..3			102 = CCYYMMDD 203 = CCYYMMDDHHMM		
Example: DTM+218:19970630:102'						

UNT - 1 MESSAGE TRAILER						
UN/EDIFACT Directory 96.A M		D6 M			CRG M	
A service segment ending a message, giving the total number of segments in the message and the control reference number of the message.						
Segment number : 27						
UN/EDIFACT Directory 96.A		D6 Description			CRG Description	
0074 Number of segments in a message **0062 Message reference number**	M n..6 M an..14	M M		This data element must have the same value as DE 0062 in the UNH segment, a sender-generated sequence number unique within an interchange.		
Example: UNT+27+19970630MJRF'						

4. History of changes

This FINSTA MIG, version 1.1 of August 2000 contains the following changes, as compared to the previous version:

- Chapter 1 - Introduction — New section.
- Chapter 2 - Message Layout — New section.
- Chapter 3 - Segment Layout — Addition of section “Introduction”.
- Chapter 3.2. - Segment Description — Layout of table altered,
  Consistency of descriptions improved
  CRG comments incorporated.
- Chapter 4 - History of changes — New section.

Changes from version 1v1 to 1v2 of November 2000:

- Chapter 3.2 – SG5-MOA-5025 — Description added to specify Floor limit indicator